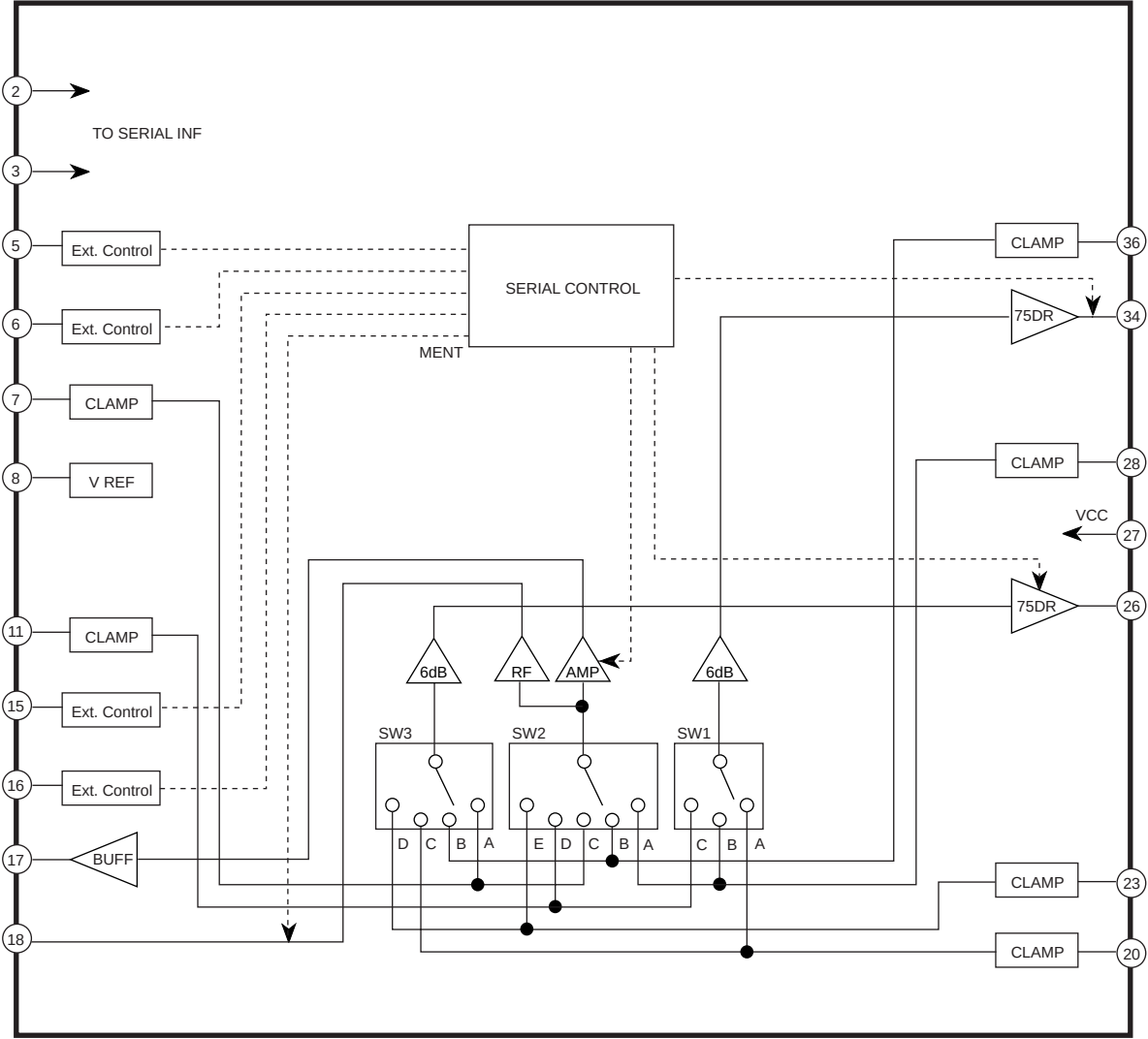
2
TO SERIAL INF
3
5
Ext. Control
6
Ext. Control
7
CLAMP
8
V REF
11
CLAMP
15
Ext. Control
16
Ext. Control
17
BUFF
18
SERIAL CONTROL
MENT
CLAMP
36
75DR
34
CLAMP
28
VCC
27
75DR
26
6dB
RF
AMP
6dB
SW3
SW2
SW1
D C B A
E D C B A
C B A
CLAMP
23
CLAMP
20