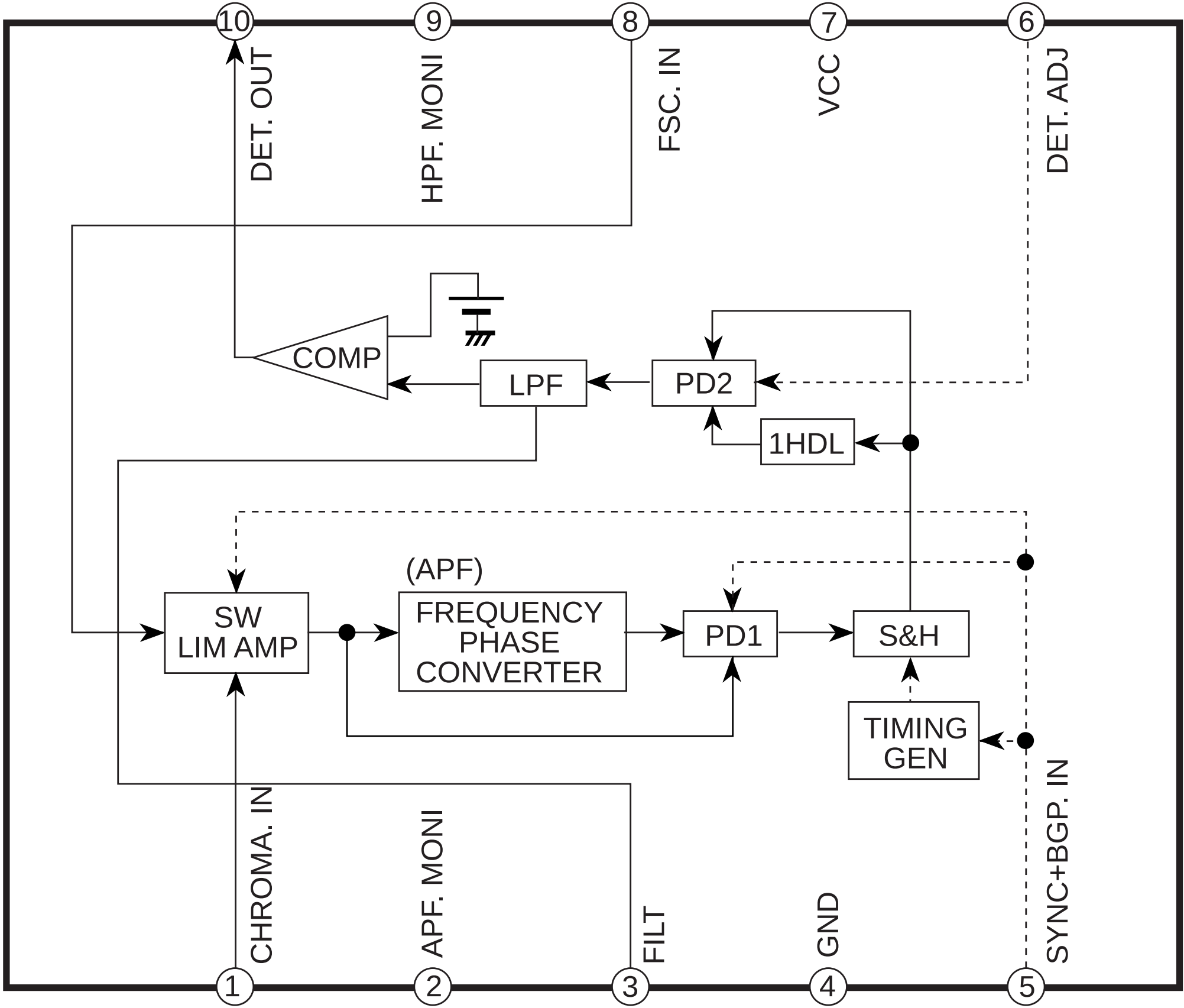
10
9
8
7
6
DET. OUT
HPF. MONI
FSC. IN
VCC
DET. ADJ
COMP
LPF
PD2
1HDL
(APF)
SW
LIM AMP
FREQUENCY
PHASE
CONVERTER
PD1
S&H
TIMING
GEN
CHROMA. IN
APF. MONI
FILT
GND
SYNC+BGP. IN
1
2
3
4
5