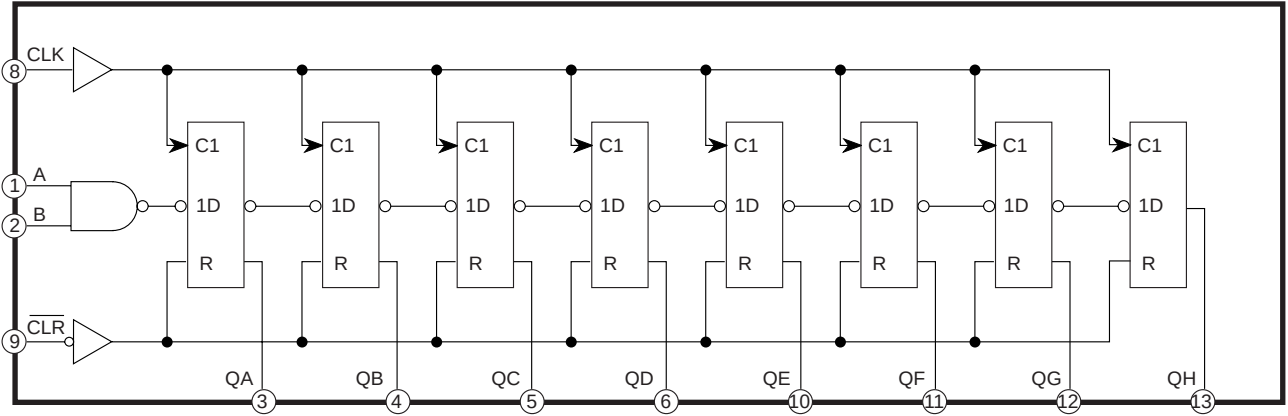
CLK
8
A
1
B
2
CLR
9
C1
1D
R
QA
3
QB
4
QC
5
QD
6
QE
10
QF
11
QG
12
QH
13