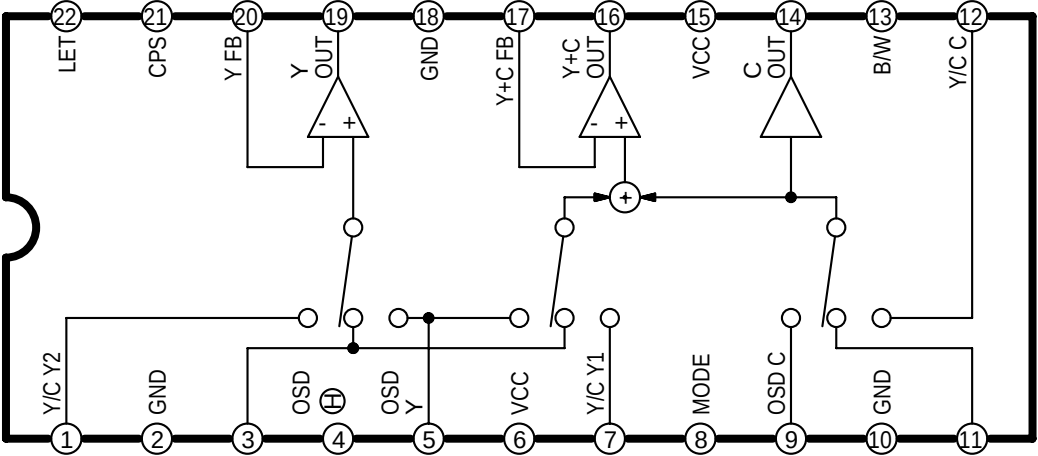
22
21
20
19
18
17
16
15
14
13
12
LET
CPS
Y FB
Y OUT
GND
Y+C FB
Y+C OUT
VCC
C OUT
B/W
Y/C C
Y/C Y2
GND
OSD
OSD Y
VCC
Y/C Y1
MODE
OSD C
GND
1
2
3
4
5
6
7
8
9
10
11