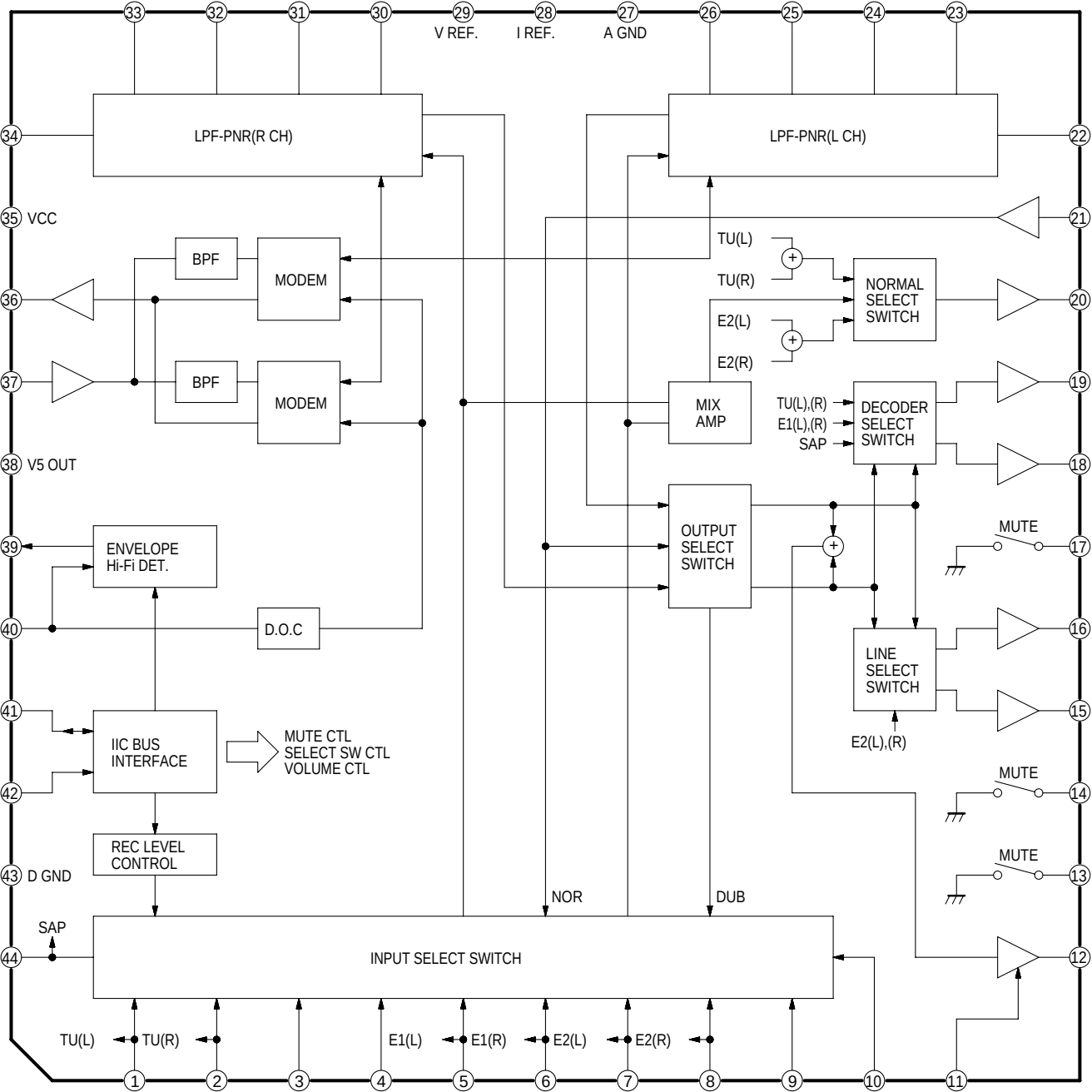
33
32
31
30
29
28
27
26
25
24
23
V REF.
I REF.
A GND
LPF-PNR(R CH)
LPF-PNR(L CH)
34
22
35 VCC
21
BPF
MODEM
TU(L)
TU(R)
NORMAL SELECT SWITCH
36
20
E2(L)
E2(R)
37
BPF
MODEM
MIX AMP
TU(L),(R)
E1(L),(R)
SAP
DECODER SELECT SWITCH
19
38 V5 OUT
18
OUTPUT SELECT SWITCH
MUTE
39
ENVELOPE Hi-Fi DET.
17
40
D.O.C
16
LINE SELECT SWITCH
41
IIC BUS INTERFACE
MUTE CTL
SELECT SW CTL
VOLUME CTL
15
E2(L),(R)
42
MUTE
14
REC LEVEL CONTROL
43 D GND
MUTE
13
NOR
DUB
SAP
44
INPUT SELECT SWITCH
12
TU(L)
TU(R)
E1(L)
E1(R)
E2(L)
E2(R)
1
2
3
4
5
6
7
8
9
10
11