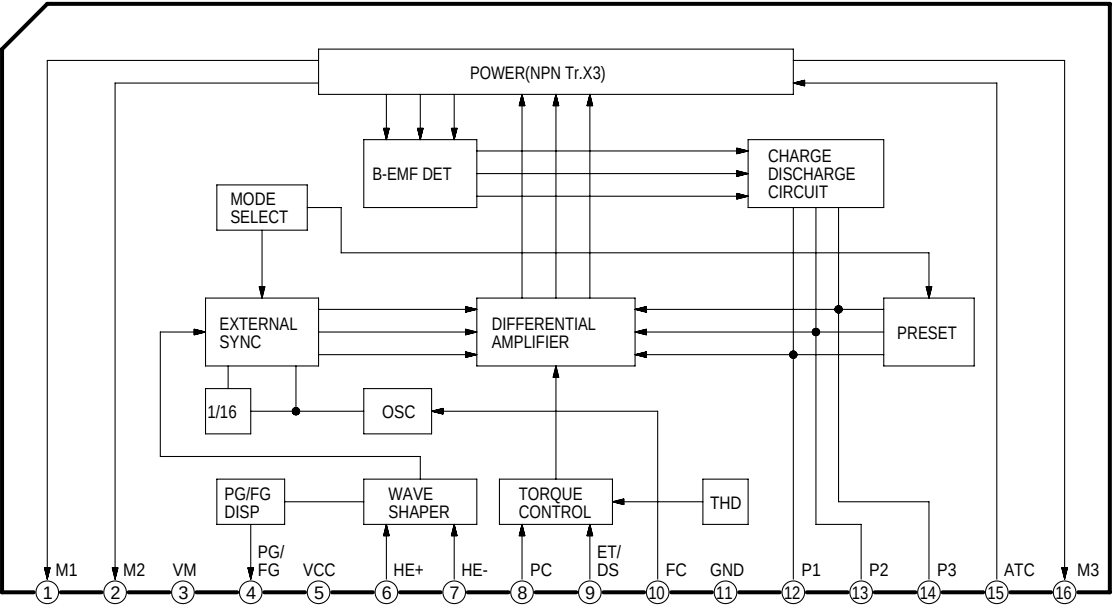
POWER(NPN Tr.X3)
B-EMF DET
CHARGE DISCHARGE CIRCUIT
MODE SELECT
EXTERNAL SYNC
DIFFERENTIAL AMPLIFIER
PRESET
1/16
OSC
PG/FG DISP
WAVE SHAPER
TORQUE CONTROL
THD
M1
M2
VM
PG/ FG
VCC
HE+
HE-
PC
ET/ DS
FC
GND
P1
P2
P3
ATC
M3
1
2
3
4
5
6
7
8
9
10
11
12
13
14
15
16